Flight hardware. Safety instructions

Before flying the system, it is mandatory to take into account the following safety instructions:

- Always carry out a visual and functional inspection of the various components before use. In case of doubt about the correct functioning and safety of the components, they must be removed from use immediately.

- The fly bar for AVIATOR LA 206 A (reference: FB LA 206) is designed to support up to a maximum of sixteen units AVIATOR LA 206 A. In no case should the aforementioned number of units be exceeded.

- In case of using the system in stacked format on a subwoofer; the maximum number of stackable units allowed will be 6 units. Always secure the array to the subwoofer by using slings.

- The hanging of the units must be carried out by professionals with adequate knowledge of the components and hardware to be used. This process must be carried out by at least two people.

- It is the responsibility of the person or team installing the system to ensure that the suspension / fixing points are suitable for the intended use.

- The application of safety factors of 5:1 for enclosures and static parts is accepted in a standardized manner. For those elements subjected to fatigue due to friction and variations in the stresses to which they are subjected, the following safety factors must be met: 5:1 for steel cable slings, 4:1 for steel chain slings and 7:1 for polyester slings. This means that an element with a breaking stress of 1000 Kg can be subjected to a static working load of 200 Kg (safety factor 5:1) and a dynamic load of only 142 Kg (safety factor 7:1).

- When hanging a system, the working load must be less than the strength of each individual anchor point as well as each enclosure.

- When suspending elements from the ceiling or other structures, extreme caution must be taken by previously calculating their resistance. Sound systems should never be hung on structures that do not guarantee full safety guarantees.

- When hoists are in operation (when lifting the system), ensure that no one is directly under or near the load.

- Under no circumstances scale or hang to the array.



- It will be necessary to fix at different points those systems that are subject to gusts of wind, to avoid their swaying. In no case is it recommended to fly systems that are subject to strong gusts of wind.

- No risk should be accepted in terms of public safety. It is the responsibility of the person or team of people carrying out the assembly to provide themselves with personal safety elements, such as helmet, gloves, safety footwear, etc., to carry out this work. As well as the correct signage of the space in which work is being done.

- All accessories used to fly a Pro DG Systems sound system not provided by Pro DG Systems are the responsibility of the user(s).

In no case will Pro DG Systems be responsible for damages caused by incorrect use of the flying system by the user or users, whether physical damage to people or damage to the product or the attached facilities. As well as for failure to comply with the previously indicated safety instructions.

Flight hardware. Components

At Pro DG Systems we know the importance for the professional of installing the different systems in a simple, fast and safe way. AVIATOR LA 206 A flight system has been designed to guarantee these purposes. The different components are detailed below:

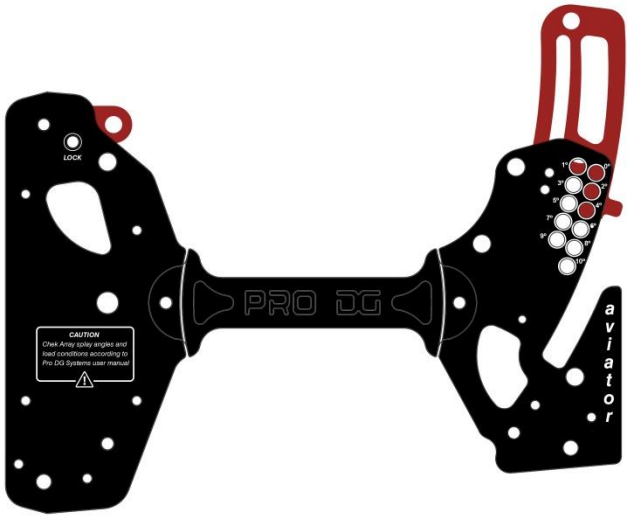

Hardware

Integrated into the box chassis itself.

Include retractable cams, their release and fixation are carried out by extracting / inserting the pins in the different points housed for this purpose.

The rear hardware has different points that allow individual angulation of each box. By default, each box is served placed at the “0” point (zero angle degree).

FB LA 206

Made of high-strength steel with oven-dried black electrostatic powder paint finish.

It allows the raise up of a maximum of sixteen units AVIATOR LA 206 A. It also serves as a fixing base to use the system in stacked format on subwoofers.

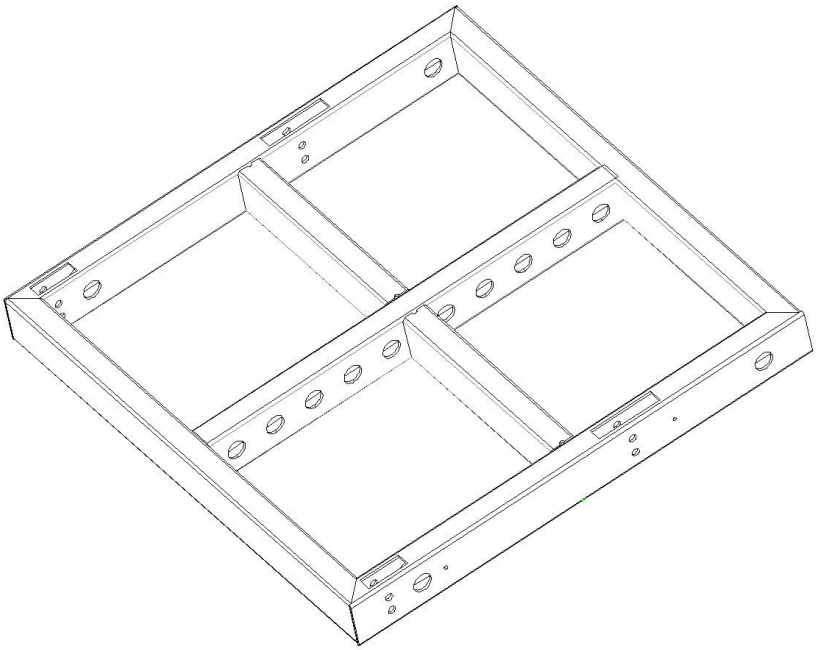

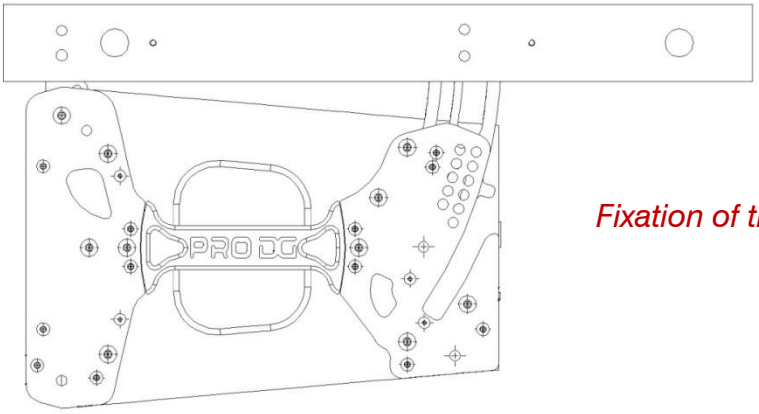

Fixation of the fly bar to the box.

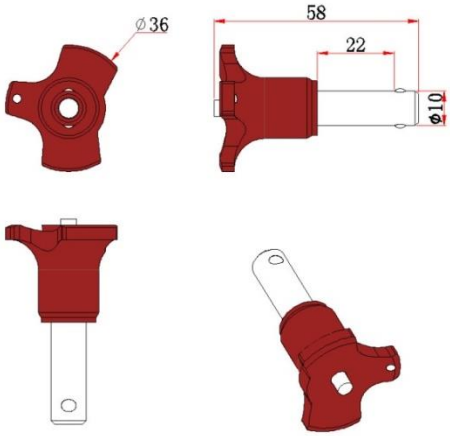

Pin locks

They allow the attachment of the box to the different components, as well as the combination between several boxes to form the array.

They have a safety extraction/insertion system through the use of a locking button.

Note: the specifications of these components may be changed without prior notice. To be aware of the latest modifications, please consult Pro DG Systems website periodically.

How to fly the system up

Important: before flying the system, carefully read the subsection “Safety instructions”, located in the “Flight hardware” section (pages 1 - 2).

1 Remove the locking pins located on the front and rear hardware to release the cams.

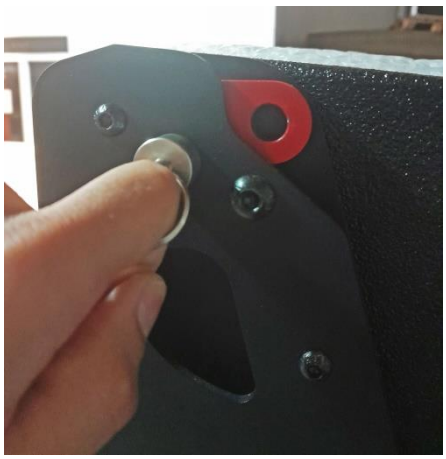

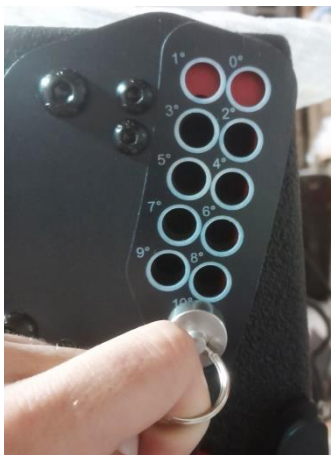

2 Pull the cams up and secure them again using the pins. On the rear hardware; set the cam at the desired graduation, the point “0” represents a zero degree of angulation.





3 Install the flight bar to the box using the fixation pin locks.

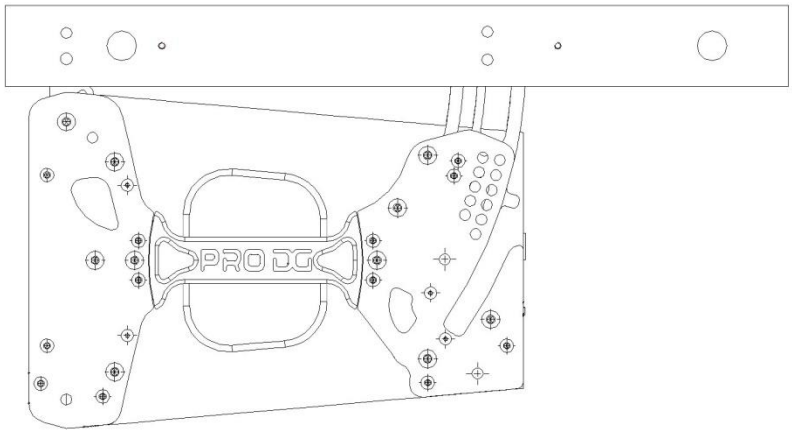

4 Then repeat step 2 for the following boxes fixation.

The design of the cams included in the rear hardware prevents uncontrolled swinging when disassembling the last box of the array assembly.



Note: use TR LA 206 transport trolley to facilitate lifting the system from the ground; stacking the boxes on the trolley first and installing the fly bar last.

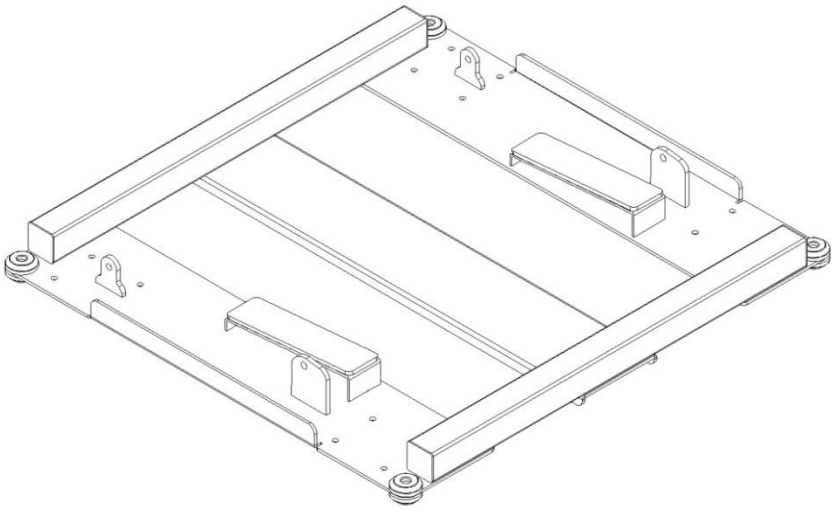

Stack mode usage

If the array is stacked on a subwoofer, it will be necessary to secure it by using slings. In any case, it is not recommended to stack more than 6 AVIATOR LA 206 A units.

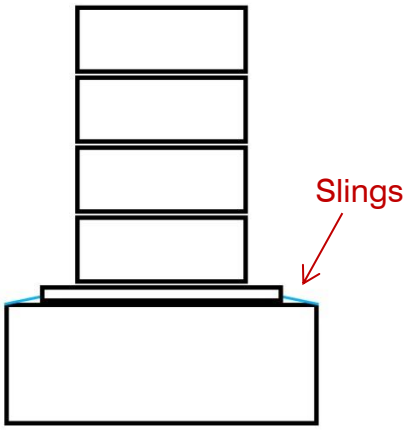

By using TR LA 206 transport trolley. Simply placing the stacked box assembly on the skid above the subwoofer **(1)**. Once located; it will be necessary to press the brake pedals of the trolley **(2)**, as well as securing the array to the subwoofer by using slings **(3)**

In any case, it is not recommended to stack more than 6 AVIATOR LA 206 A units.

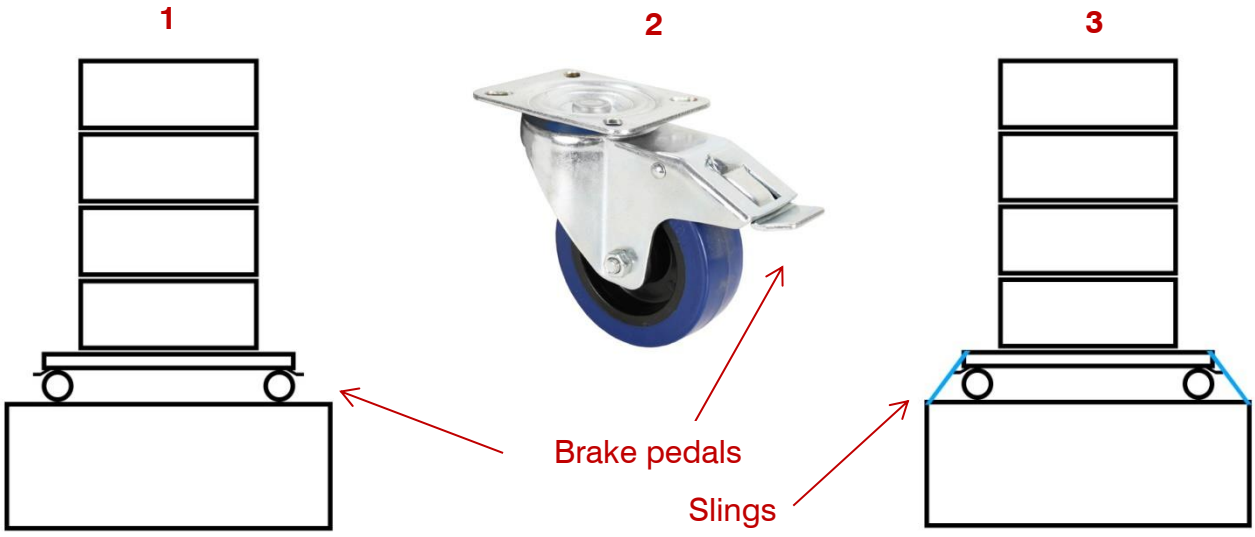

By using the specific support tray: allows for the stacking of up to 2 AVIATOR LA 206 A units using an extendable pole, a subwoofer, or a tripod.

